Optical Packet Switching And Re-Configurable Optical Network

Dan Al-Salameh, Ph. D.
Director, Optical Network Research
JDS Uniphase

JDS Uniphase

Network Requirement for Optical Packet Switching

- Overlay network with pre-assigned wavelengths utilizing Re-Configurable Optical Network (RCON)
- Physical and logical diversity
- All Optical core and pre-assigned O-E-O if necessary
- Dedicated signaling and control channel for bandwidth management, maintenance, resource allocation, congestion resolution, security, etc

JDS Uniphase

Re-Configurable Optical Network: Proposed Node Architecture

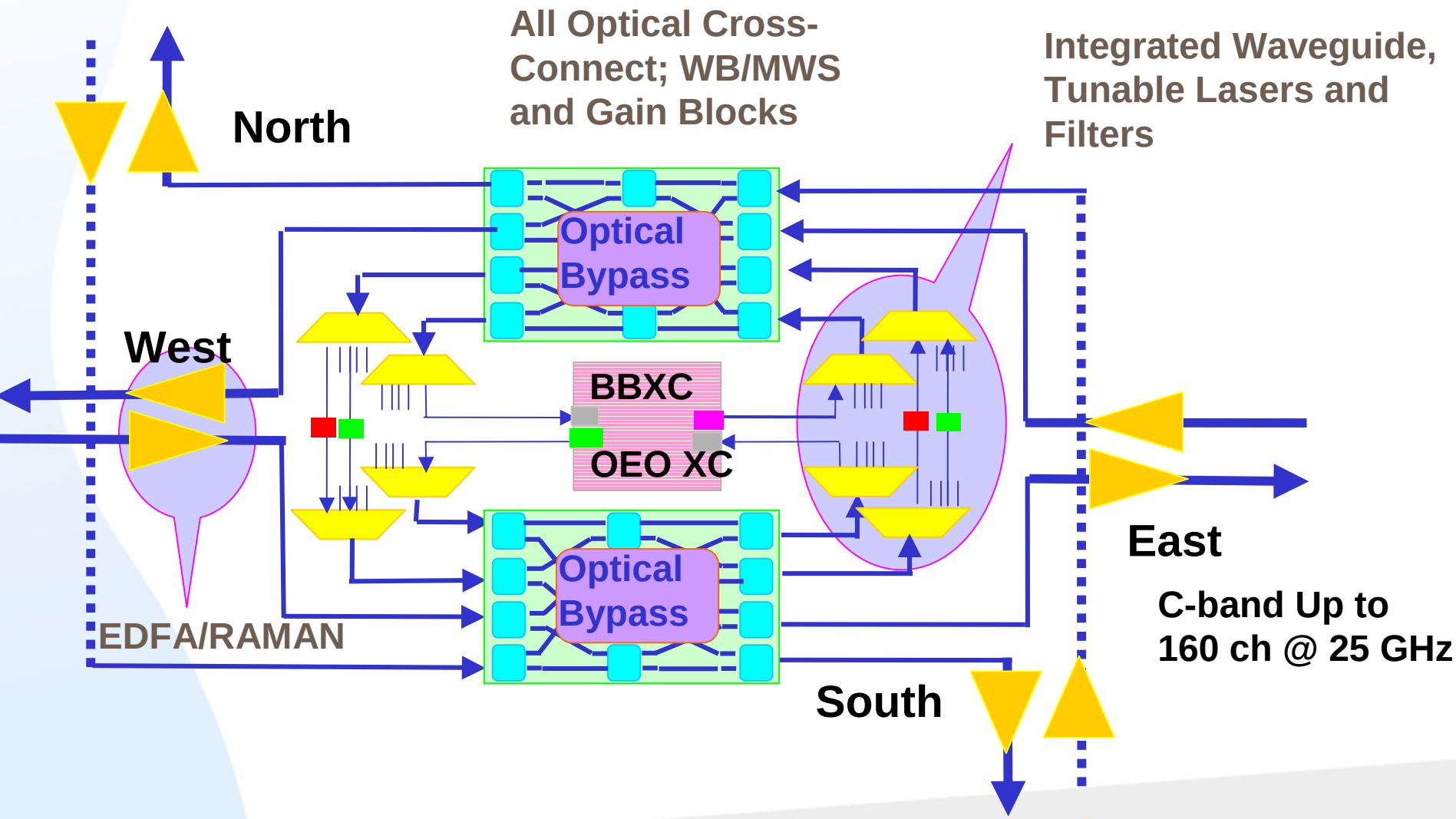

JDS Uniphase

Re-Configurable and Optical Packet Switch Network

- **Benefits:**
  - **Lower CapEx and OpEx (less O-E-O) no manual intervention**
  - **Inventory reduction**
  - **Space and power reduction**
  - **Scalability**
  - **Flexibility and dynamic resource allocation**
- **Technical Challenges:**
  - **Performance constraints: OSNR, CD, PMD**
  - **Blocking and Routing Constraints**
  - **Complex Transmission Engineering Rules**
  - **Interoperability and standardization**

Next Generation Products: Possible Development by JDSU

- **Components and Modules:**
  - **Ultra Fast optical Optical switches**
  - **Multi Wavelength Switching elements**
  - **Integrated Waveguide: Mux/Dmux, VOA, Switches, Optical Monitors, Gain Blocks, etc.**
  - **Fast Tunable Lasers and Tunable Filters**
  - **Adaptive receiver**
  - **Advanced EDFA and RAMAN**
- **Network modeling and simulation to determine:**
  - **Technical and economic feasibility**
  - **Blocking probabilities, O-E-O requirements**
  - **Cost-performance trade-offs**
  - **Trade-offs between Re-configurable Network and Optical Packet Switching design specifications**

Possible Contribution by JDS Uniphase

Testbed Activities:

- Long Haul with amplified 160 λ
- High Speed components evaluation lab
- Circulating Loop
- Transient studies lab

Proposed work Program:

- Components and modules evaluation in a “real” network environment
- Prototype evaluation: optical switches, tunable lasers and filters, integrated waveguides, etc.
- Network performance studies: OSNR, Dispersion, PMD, BER
- Transient studies with optical switched network

JDS Uniphase