Insertion of Prior Knowledge into the Multistage Wiener Filter

2003 KASSPER Workshop

John D. Hiemstra
J. Scott Goldstein

15 April 2003

Outline

- Introduction
- Algorithm Descriptions
- Simulation Results
- Summary

Introduction

- Objective
  - Investigate methods for inserting prior knowledge into the multistage Wiener filter (MWF)
- Approach
  - Two methods considered
    - Linear constraints
      - Directional constraints (*A priori* knowledge)
      - Quiescent pattern constraints (Recursive)
    - CG-MWF algorithm with non-zero initialization
  - Two types of knowledge considered
    - *A priori* knowledge (“Knowledge-Aided”)
    - Recursive

MWF Recursion Equations & Structure

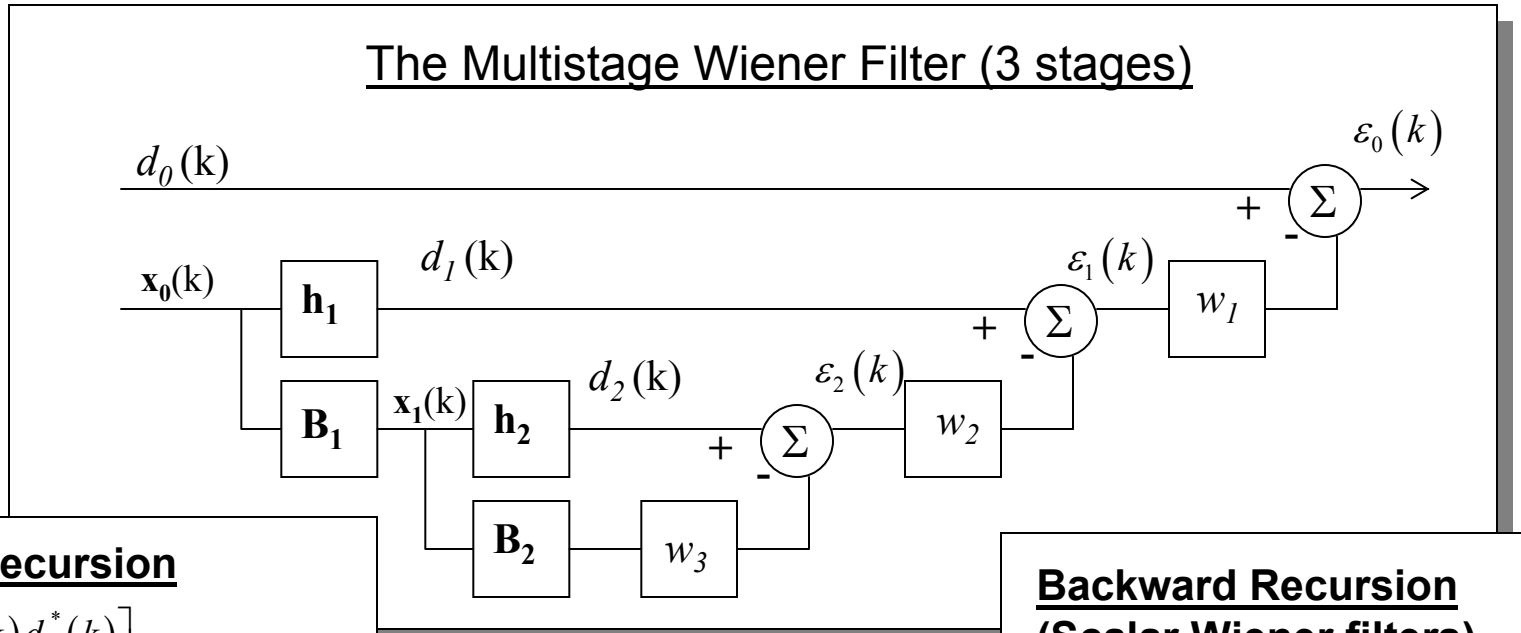

Forward Recursion

$$\mathbf{r}_{\mathrm{x}_i d_i} = E\left[\mathbf{x}_i(k) d_i^*(k)\right]$$

$$\delta_{\mathrm{i+1}} = \sqrt{\mathbf{r}_{\mathrm{x}_i d_i}^{\mathrm{H}} \mathbf{r}_{\mathrm{x}_i d_i}} = \text{ magnitude of } \mathbf{r}_{\mathrm{x}_i d_i}$$

$$\mathbf{h}_{i+1} = \frac{\mathbf{r}_{\mathrm{x}_i d_i}}{\delta_{\mathrm{i+1}}} = \text{ direction of } \mathbf{r}_{\mathrm{x}_i d_i}$$

$$\mathbf{B}_{i+1} = null\left(\mathbf{h}_{i+1}\right)$$

$$d_{i+1}(k) = \mathbf{h}_{i+1}^{H} \mathbf{x}_i(k)$$

$$\mathbf{x}_{i+1}(k) = \mathbf{B}_{i+1} \mathbf{x}_i(k)$$

Backward Recursion (Scalar Wiener filters)

$$w_i = \frac{\delta_i}{\xi_i}$$

$$\varepsilon_{i-1}(k) = d_{i-1}(k) - w_i^* \varepsilon_i(k)$$

$$\xi_{i-1} = E\left[\left|\varepsilon_{i-1}(k)\right|^2\right]$$

Outline

- Introduction
- Algorithm Descriptions
- Simulation Results
- Summary

Linear Constrained MWF

$$\mathbf{w}^{(lc-mwf)} = \underset{\mathbf{w}^H\mathbf{C}=\mathbf{g},\ \mathbf{w}\in K(\mathbf{r},\mathbf{R},r)}{\arg\min} \left\{ \mathbf{w}^H \mathbf{R}_\mathbf{x} \mathbf{w} \right\}$$

where

$\mathbf{C}$ = constraint matrix

$\mathbf{g}$ = value of the constraints

$$\mathbf{w}_q = \mathbf{C}\left[\mathbf{C}^H\mathbf{C}\right]^{-1}\mathbf{g}$$

$$\mathbf{B} = \mathtt{null}\left(\mathbf{C}^H\right)$$

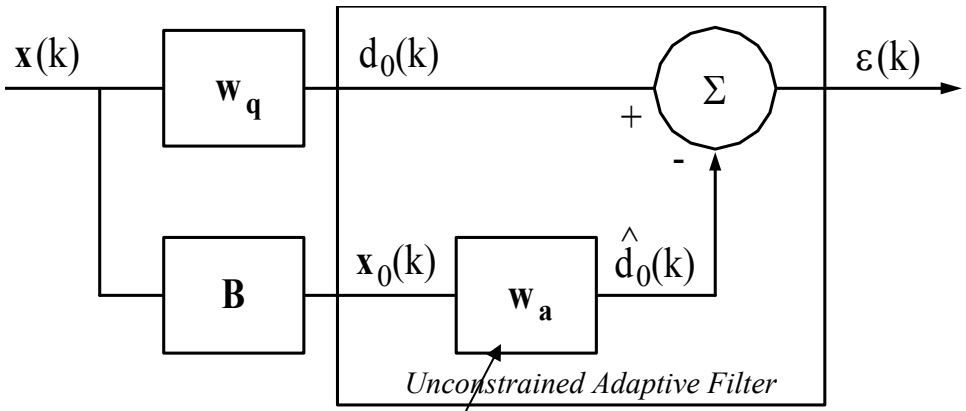

Use MWF for unconstrained adaptive filter

Linear Constrained MWF

Knowledge-Aided Directional Null Constraints

$$\mathbf{C} = \begin{bmatrix} \mathbf{s} & \mathbf{s}_1 & \mathbf{s}_2 & \cdots & \mathbf{s}_{Nj} \end{bmatrix}$$

$$\mathbf{g} = \begin{bmatrix} 1 & 0 & 0 & \cdots & 0 \end{bmatrix}^T$$

where

$$\mathbf{s} = \mathbf{v}_\theta / \left\| \mathbf{v}_\theta \right\|$$

$$\mathbf{v}_\theta = \begin{bmatrix} e^{j0} & e^{j2\pi d \sin\theta/\lambda} & \cdots & e^{j2\pi(N-1)d\sin\theta/\lambda} \end{bmatrix}^T$$

$\mathbf{s}_i =$ steering vector of known interference

Recursive Quiescent Pattern Constraints*

$$\mathbf{C} = \begin{bmatrix} \bar{\mathbf{w}}_{dq} & \mathbf{c}_s \end{bmatrix}$$

$$\mathbf{g}^H = \begin{bmatrix} 1 & 0 \end{bmatrix}$$

where $\bar{\mathbf{w}}_{dq} = \dfrac{\mathbf{w}_{dq}}{\mathbf{w}_{dq}^H \mathbf{w}_{dq}}$

and $\mathbf{w}_{dq}(\tau_{i+1}) = \mathbf{w}^{(r_{best})}(\tau_i)$

and $\mathbf{c}_s = \mathbf{P}^{\perp}_{\bar{\mathbf{w}}_{dq}}$

** Tseng, Griffiths, "A unified approach to the design of linear constraints in minimum variance adaptive beamformers", IEEE Trans. Antenn. Propagat., Dec. 1992.*

CG-MWF

- The method of conjugate gradients (CG) can be used to implement the multistage Wiener filter (MWF). We refer to this approach as CG-MWF.

- Both algorithms operate in the Krylov subspace

$$\begin{aligned}
\mathbf{w}_{a,r}^{(mwf)} &= \underset{\mathbf{w}_a \in \mathrm{Ran}(\mathbf{L}_r)}{\arg\min} \left\{ \mathbf{w}_a^H \mathbf{R}_{\mathbf{x}_0} \mathbf{w}_a - 2\Re(\mathbf{r}_{\mathbf{x}d}^H \mathbf{w}_a) + \sigma_d^2 \right\} \\
&= \underset{\mathbf{w}_a \in K(\mathbf{R}_{\mathbf{x}_0}, \mathbf{r}_{\mathbf{x}d})}{\arg\min} \left\{ \mathbf{w}_a^H \mathbf{R}_{\mathbf{x}_0} \mathbf{w}_a - 2\Re(\mathbf{r}_{\mathbf{x}d}^H \mathbf{w}_a) + \sigma_d^2 \right\} \\
&= \underset{\mathbf{w}_a \in K(\mathbf{R}_{\mathbf{x}_0}, \mathbf{r}_{\mathbf{x}d})}{\arg\min} \left\{ \mathbf{w}_a^H \mathbf{R}_{\mathbf{x}_0} \mathbf{w}_a - 2\Re(\mathbf{r}_{\mathbf{x}d}^H \mathbf{w}_a) \right\} \\
&= \underset{\mathbf{w}_a \in K(\mathbf{R}_{\mathbf{x}_0}, \mathbf{r}_{\mathbf{x}d})}{\arg\min} \left\{ \phi(\mathbf{w}_a) \right\} \\
&= \mathbf{w}_{a,r}^{(cg)}
\end{aligned}$$

- The CG-MWF algorithm uses an initializing vector that can be used to insert prior knowledge

$\mathbf{w}_a$ Computed via CG*

$$\alpha_i = \left\| \mathbf{X}_0 \mathbf{t}^{(i-1)} \right\|^2 \Big/ \left\| \mathbf{X}_0^H \mathbf{a}^{(i-1)} \right\|^2$$

$$\mathbf{w}_a^{(i)} = \mathbf{w}_a^{(i-1)} + \alpha_i \mathbf{a}^{(i-1)}$$

$$\mathbf{t}^{(i)} = \mathbf{t}^{(i-1)} - \alpha_i \mathbf{X}_0^H \mathbf{a}^{(i-1)}$$

$$\beta_i = \left\| \mathbf{X}_0 \mathbf{t}^{(i)} \right\|^2 \Big/ \left\| \mathbf{X}_0 \mathbf{t}^{(i-1)} \right\|^2$$

$$\mathbf{a}^{(i)} = \mathbf{X}_0 \mathbf{t}^{(i)} + \beta_i \mathbf{a}^{(i-1)}$$

Initialized with

starting vector $\mathbf{w}_a^{(0)}$

$$\mathbf{t}^{(0)} = \mathbf{d}_0^H - \mathbf{X}_0^H \mathbf{w}_a^{(0)}$$

$$\mathbf{a}^{(0)} = \mathbf{X}_0 \mathbf{t}^{(0)}$$

* *"CGLS" variant*

CG-MWF

Knowledge-Aided

$$\mathbf{w}_a^{(0)} = \mathbf{w}_a^{(dq)}$$

Recursive

$$\mathbf{w}_a^{(0)}\left(\tau_{i+1}\right) = \mathbf{w}_a^{(r_{best})}\left(\tau_i\right)$$

Outline

- Introduction
- Algorithm Descriptions
- Simulation Results
- Summary

Simulation Scenario

- Spatial Array Processing
  - N=32 element uniform linear array
  - 25 noise jammers
  - K=1N=32 samples
  - 1000 Monte Carlo trials

Knowledge-Aided CG-MWF

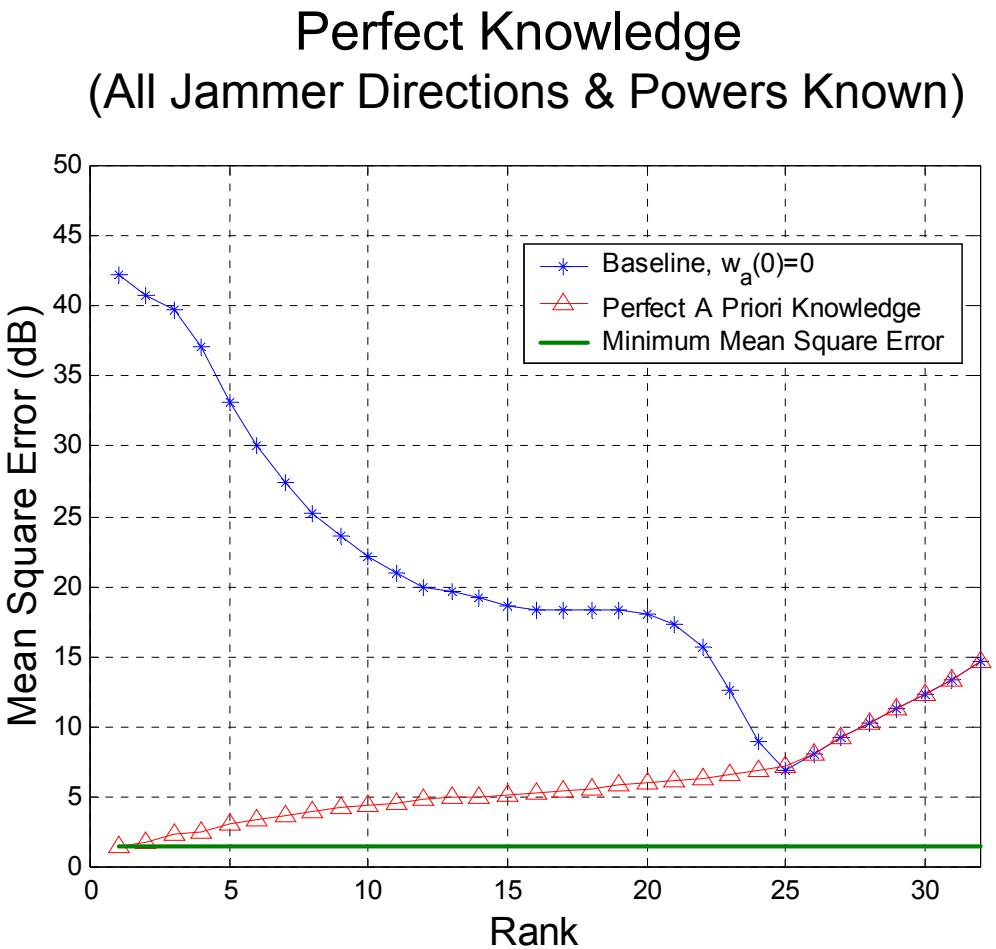

Knowledge-Aided CG-MWF

Sensitivity Analysis

Jammer Direction Uncertainty

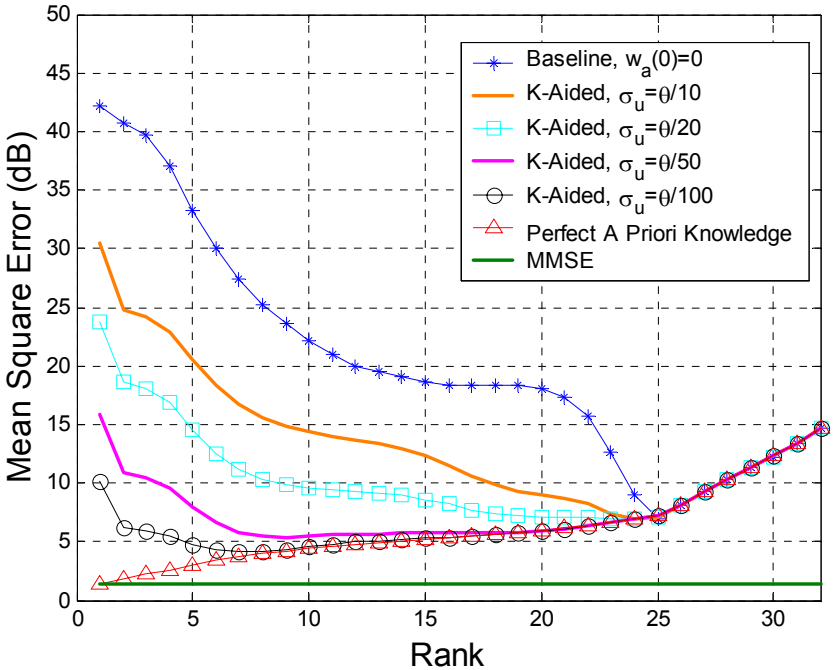

Jammer Power Uncertainty

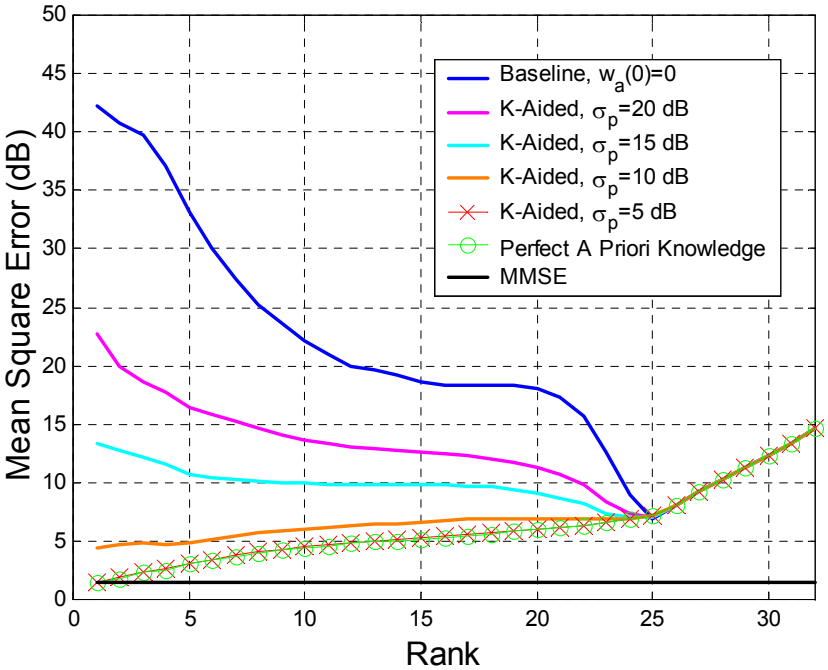

Accurate a priori knowledge boosts performance
Required angular accuracy ~ 1/20th of a beamwidth (for this example)

Recursive CG-MWF

Stationary Data

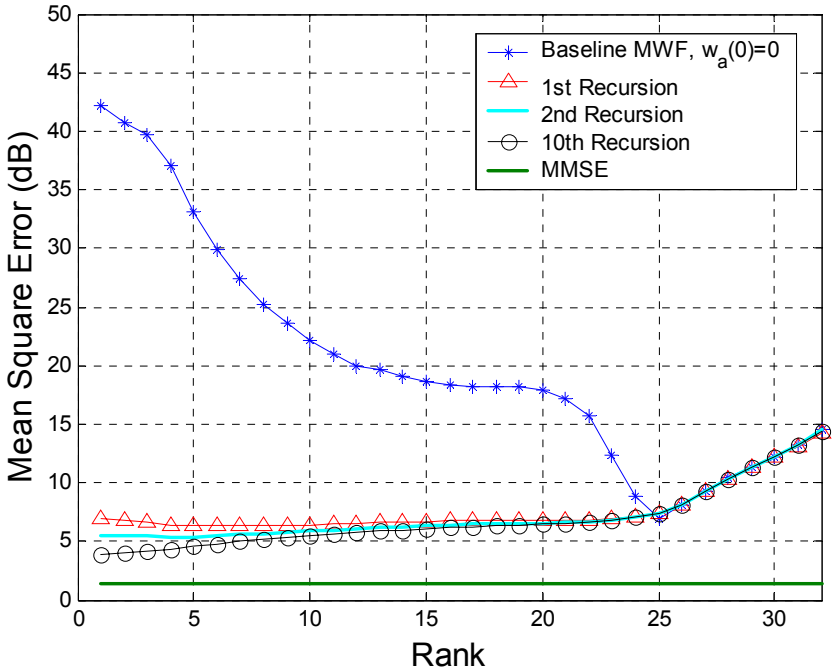

Nonstationary Data
(New Jammers Added)

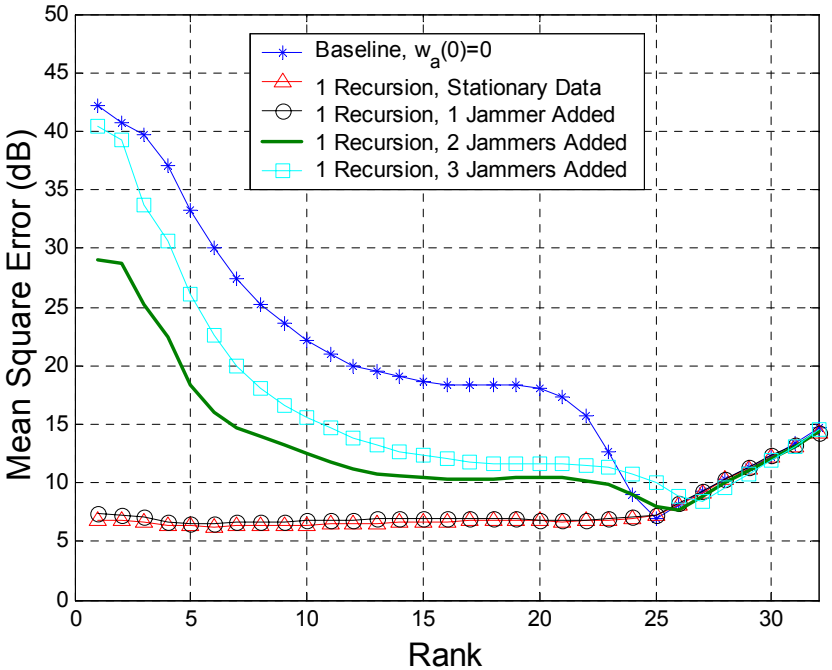

Performance with stationary data is excellent
Nonstationarities degrade performance, but degradation is graceful

Knowledge-Aided Linear Constrained MWF

Perfect Knowledge
(10 Known Jammer Directions)

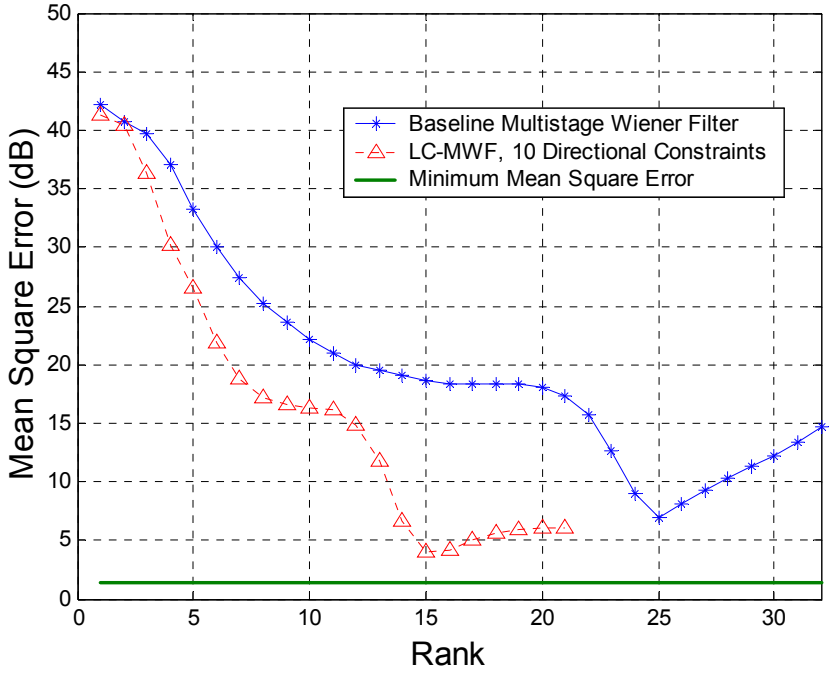

Sensitivity Analysis
(Jammer Direction Uncertainty)

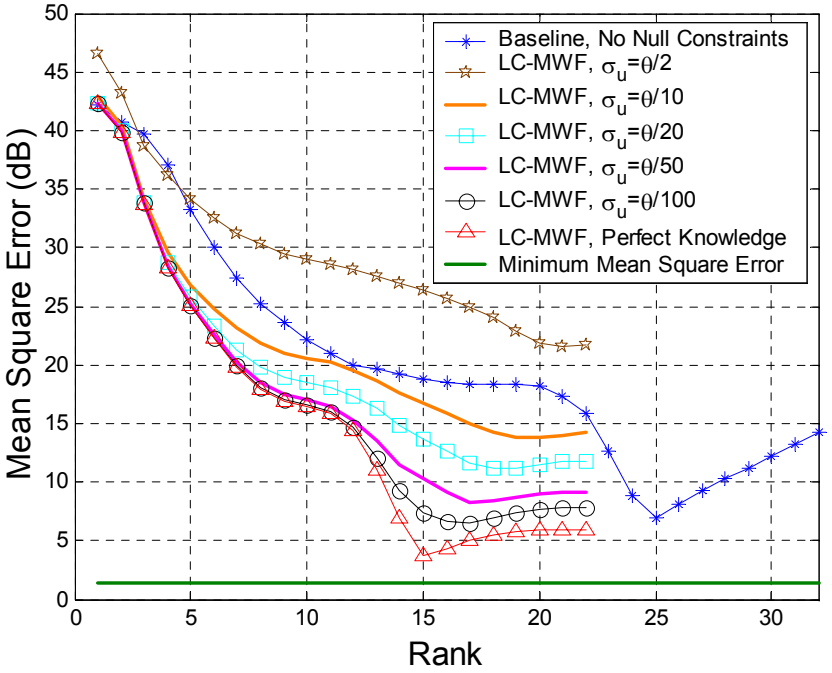

Recursive Linear Constrained MWF

Stationary Data

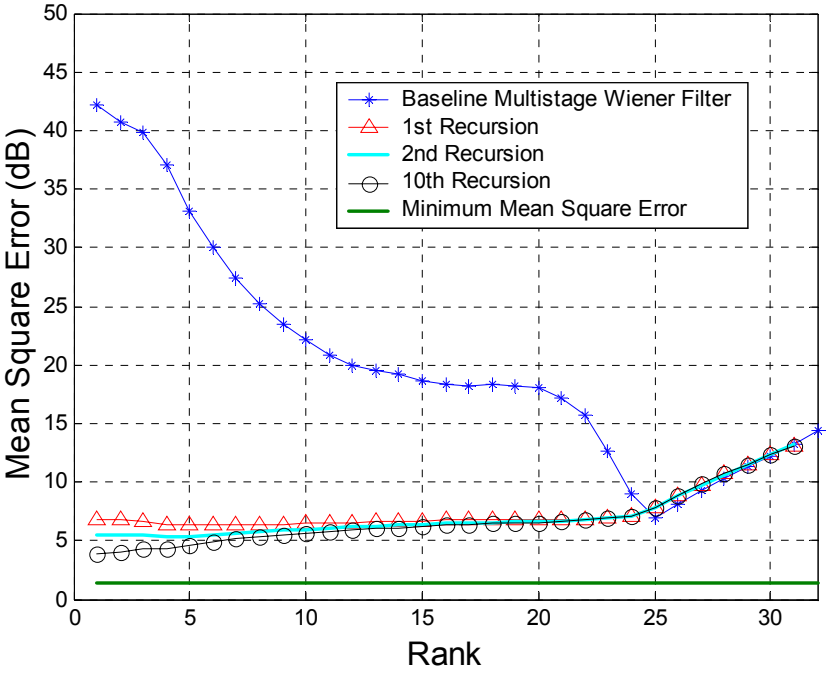

Nonstationary Data
(New Jammers Added)

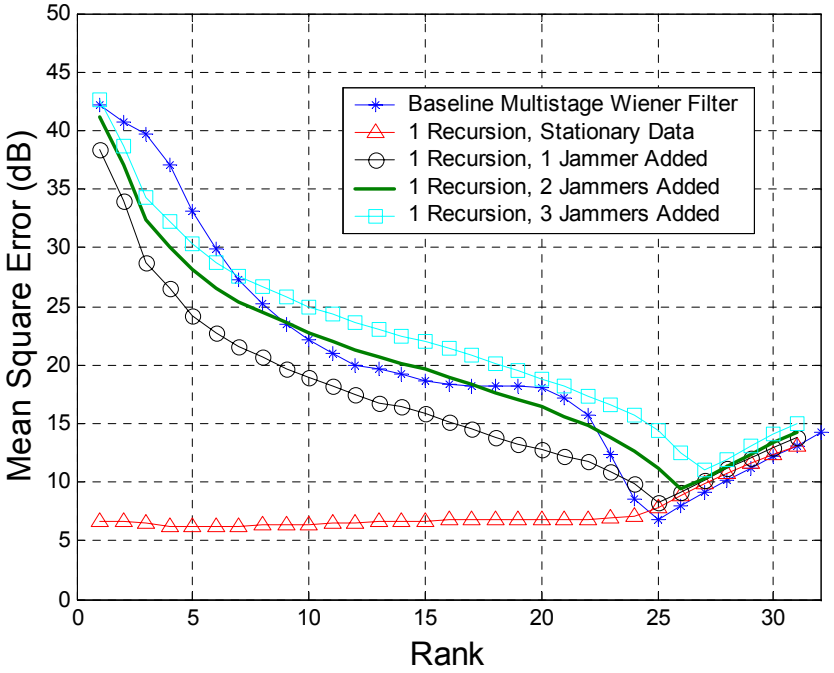

Combined Knowledge-Aided and Recursive MWF

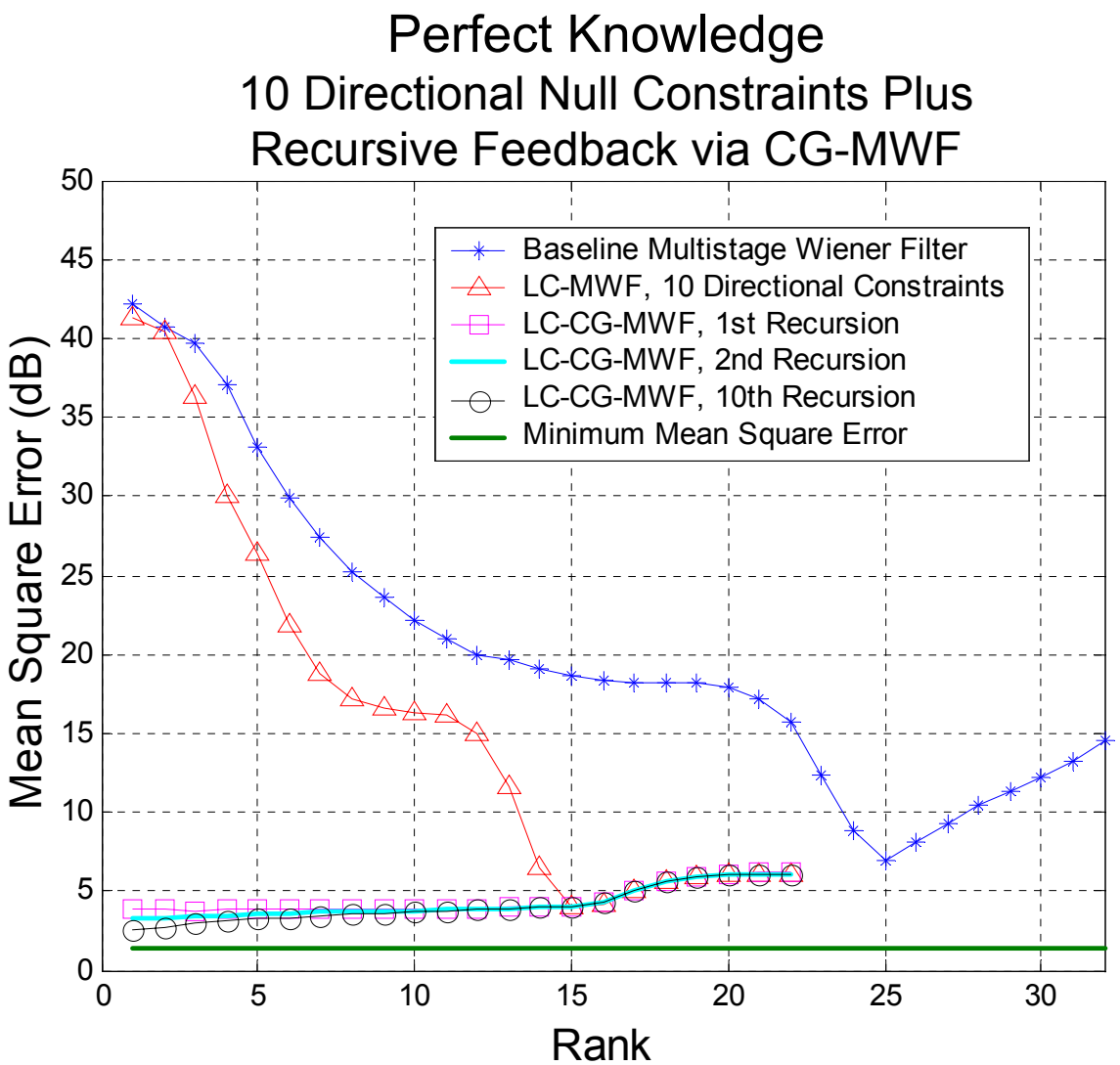

Outline

- Introduction
- Algorithm Descriptions
- Simulation Results
- Summary

Summary

- Two approaches for inserting knowledge into the MWF have been investigated
  - Linear constraints
  - Nonzero initialization of the CG-MWF
- Two types of knowledge have been investigated
  - A priori knowledge
  - Recursive knowledge
- Performance was evaluated under ideal and perturbed conditions
  - Techniques are productive when prior knowledge is either accurate and stationary or only transiently inaccurate or nonstationary
  - Breakpoints were observed at approximately $1/20^{th}$ of a beamwidth in angle and 15 dB in power